# Fondi Tipo F (Semi ellittici)

R=0,8xD r=D/6,5

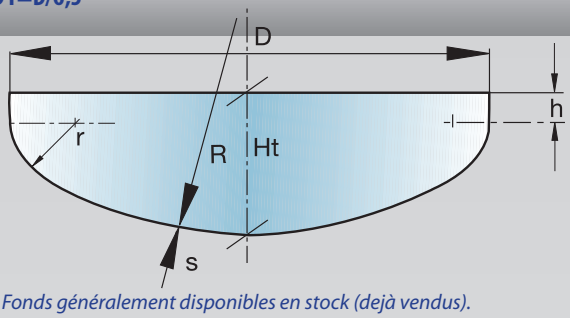


*Semielliptical heads*
*Fonds semi-elliptiques*

- ☐ Fondi generalmente disponibili a magazzino (salvo venduto).
- ● Fondi generalmente disponibili a magazzino (salvo venduto) anche in acciaio Inox.

I fondi evidenziati in scuro sono stampati

- ☐ *Dished heads generally avaiable in stock (sold excepted).*
- ● *Dished heads generally avaiable in stock (sold excepted) made in stainless steel.*

*Dished heads highlighted are press-formed*

- ☐ *Fonds généralement disponibles en stock (dejà vendus).*
- ● *Fonds généralement disponibles en stock (sauf dejà vendus), même en acier Inox.*

*Les fonds marqués en foncé sont emboutis*

| D | s | R | r | h | Ht | Kg. | V |
|---|---|---|---|---|---|---|---|
| **500** | 3 | 400 | 76 | 30 | 155 | 7 | 22 |
| | 4 | 400 | 76 | 30 | 155 | 10 | 22 |
| | 5 | 400 | 76 | 30 | 155 | 12 | 22 |
| **550** | 3 | 440 | 84 | 30 | 170 | 9 | 28 |
| | 4 | 440 | 84 | 30 | 170 | 12 | 28 |
| | 5 | 440 | 84 | 30 | 170 | 15 | 28 |
| **600** | 3 | 480 | 90 | 30 | 180 | 10 | 35 |
| | 4 | 480 | 90 | 30 | 180 | 14 | 35 |
| | 5 | 480 | 90 | 30 | 180 | 17 | 35 |
| **650** | 3 | 520 | 100 | 30 | 196 | 11 | 45 |
| | 4 | 520 | 100 | 30 | 196 | 16 | 45 |
| | 5 | 520 | 100 | 30 | 197 | 19 | 45 |
| | 6 | 520 | 100 | 30 | 197 | 22 | 45 |
| | 8 | 520 | 100 | 30 | 198 | 32 | 45 |
| **700** | 3 | 560 | 110 | 30 | 210 | 13 | 55 |
| | 4 | 560 | 110 | 30 | 210 | 18 | 55 |
| | 5 | 560 | 110 | 30 | 211 | 22 | 55 |
| | 6 | 560 | 110 | 30 | 211 | 26 | 55 |
| | 8 | 560 | 110 | 30 | 212 | 36 | 55 |
| **750** | 3 | 600 | 115 | 30 | 221 | 15 | 67 |
| | 4 | 600 | 115 | 30 | 222 | 20 | 67 |
| | 5 | 600 | 115 | 30 | 222 | 25 | 67 |
| | 6 | 600 | 115 | 30 | 222 | 30 | 67 |
| | 8 | 600 | 115 | 30 | 223 | 40 | 67 |
| **800** | 4 | 640 | 141 | 35 | 250 | 25 | 87 |
| | 5 | 640 | 141 | 35 | 250 | 31 | 87 |
| | 5.5 | 640 | 141 | 35 | 250 | 34 | 87 |
| | 6 | 640 | 141 | 35 | 250 | 36 | 87 |
| | 7 | 640 | 141 | 35 | 250 | 42 | 87 |
| | 7.5 | 640 | 141 | 35 | 250 | 45 | 87 |
| | 8 | 640 | 123 | 30 | 237 | 44 | 80 |
| | 10 | 640 | 123 | 30 | 237 | 56 | 80 |
| | 12 | 640 | 123 | 30 | 237 | 66 | 80 |
| **850** | 4 | 680 | 130 | 30 | 247 | 36 | 95 |
| | 5 | 680 | 130 | 30 | 247 | 32 | 95 |
| | 6 | 680 | 130 | 30 | 247 | 39 | 95 |
| | 8 | 680 | 130 | 30 | 247 | 52 | 95 |
| | 10 | 680 | 130 | 40 | 259 | 64 | 99 |
| | 12 | 680 | 130 | 50 | 270 | 78 | 104 |
| **900** | 4 | 720 | 140 | 30 | 261 | 30 | 112 |
| | 5 | 720 | 140 | 30 | 261 | 37 | 112 |
| | 6 | 720 | 140 | 30 | 261 | 45 | 112 |
| | 8 | 720 | 140 | 30 | 261 | 60 | 112 |
| | 10 | 720 | 140 | 40 | 273 | 74 | 117 |
| | 12 | 720 | 140 | 50 | 284 | 90 | 123 |
| **950** | 4 | 760 | 145 | 30 | 272 | 34 | 130 |
| | 5 | 760 | 145 | 30 | 272 | 42 | 130 |
| | 6 | 760 | 145 | 30 | 272 | 51 | 130 |
| | 8 | 760 | 145 | 30 | 272 | 68 | 130 |
| | 10 | 760 | 145 | 40 | 284 | 85 | 136 |
| | 12 | 760 | 145 | 50 | 295 | 105 | 142 |

• In queste tabelle sono descritte le misure utilizzate con più frequenza, naturalmente è possibile anche produrre fondi con caratteristiche intermedie o superiori fino ad un diametro massimo di 4000 mm. ed uno spessore massimo di 22 mm.
• Ht, peso e V sono dati teorici e puramente indicativi quindi non sono da prendere come base contrattuale.

| D | s | R | r | h | Ht | Kg. | V |
|---|---|---|---|---|---|---|---|
| **1000** | 4 | 800 | 175 | 45 | 313 | 39 | 170 |
| | 5 | 800 | 175 | 45 | 313 | 50 | 170 |
| | 5.5 | 800 | 175 | 45 | 313 | 52 | 1740 |
| | 6 | 800 | 175 | 45 | 313 | 78 | 170 |
| | 8 | 800 | 175 | 45 | 313 | 78 | 170 |
| | 10 | 800 | 153 | 40 | 297 | 95 | 157 |
| | 12 | 800 | 153 | 50 | 310 | 145 | 163 |
| | 15 | 800 | 153 | 50 | 310 | 145 | 163 |
| | 18 | 800 | 153 | 50 | 310 | 173 | 163 |
| | 20 | 800 | 153 | 50 | 310 | 200 | 163 |
| **1100** | 5 | 880 | 170 | 30 | 312 | 55 | 200 |
| | 6 | 880 | 170 | 30 | 312 | 72 | 200 |
| | 8 | 880 | 170 | 30 | 313 | 96 | 200 |
| | 10 | 880 | 170 | 40 | 324 | 120 | 207 |
| | 12 | 880 | 170 | 50 | 336 | 150 | 214 |
| | 15 | 880 | 170 | 50 | 336 | 190 | 214 |
| | 18 | 880 | 170 | 50 | 338 | 230 | 214 |
| | 20 | 880 | 170 | 50 | 338 | 260 | 214 |
| **1200** | 4 | 900 | 193 | 65 | 390 | 54 | 305 |
| | 5 | 900 | 193 | 65 | 390 | 70 | 305 |
| | 5.5 | 900 | 193 | 65 | 390 | 78 | 305 |
| | 6 | 900 | 193 | 65 | 390 | 82 | 305 |
| | 6,5 | 900 | 193 | 65 | 390 | 96 | 305 |
| | 8 | 960 | 184 | 30 | 337 | 105 | 253 |
| | 10 | 960 | 184 | 40 | 348 | 130 | 263 |
| | 12 | 960 | 184 | 50 | 360 | 160 | 270 |
| | 15 | 960 | 184 | 50 | 360 | 200 | 270 |
| | 18 | 960 | 184 | 50 | 360 | 235 | 270 |
| | 20 | 960 | 184 | 50 | 360 | 270 | 270 |
| | 22 | 960 | 184 | 50 | 360 | 290 | 270 |
| **1250** | 5 | 1000 | 190 | 30 | 348 | 70 | 285 |
| | 6 | 1000 | 190 | 30 | 348 | 90 | 285 |
| | 8 | 1000 | 190 | 30 | 348 | 120 | 285 |
| | 10 | 1000 | 190 | 40 | 360 | 150 | 295 |
| | 12 | 1000 | 190 | 50 | 372 | 190 | 305 |
| | 15 | 1000 | 190 | 50 | 372 | 230 | 305 |
| | 18 | 1000 | 190 | 50 | 372 | 280 | 305 |
| | 20 | 1000 | 190 | 50 | 375 | 310 | 305 |
| | 22 | 1000 | 190 | 50 | 375 | 340 | 305 |
| **1300** | 5 | 1040 | 200 | 30 | 362 | 78 | 320 |
| | 6 | 1040 | 200 | 30 | 362 | 100 | 320 |
| | 8 | 1040 | 200 | 30 | 362 | 132 | 320 |
| | 10 | 1040 | 200 | 40 | 374 | 165 | 333 |
| | 12 | 1040 | 200 | 50 | 385 | 200 | 342 |
| | 15 | 1040 | 200 | 50 | 385 | 250 | 342 |
| | 18 | 1040 | 200 | 50 | 385 | 300 | 342 |
| | 20 | 1040 | 200 | 50 | 385 | 335 | 343 |
| | 22 | 1040 | 200 | 50 | 385 | 370 | 343 |
| **1400** | 5 | 1120 | 215 | 30 | 388 | 90 | 397 |
| | 6 | 1120 | 215 | 30 | 388 | 115 | 397 |
| | 8 | 1120 | 215 | 30 | 388 | 150 | 397 |
| | 10 | 1120 | 215 | 40 | 399 | 190 | 410 |
| | 12 | 1120 | 215 | 50 | 410 | 230 | 422 |
| | 15 | 1120 | 215 | 50 | 410 | 290 | 422 |
| | 18 | 1120 | 215 | 50 | 410 | 350 | 422 |
| | 20 | 1120 | 215 | 50 | 413 | 390 | 422 |
| | 22 | 1120 | 2150 | 50 | 413 | 420 | 422 |
| **1500** | 5 | 1200 | 230 | 30 | 414 | 103 | 485 |
| | 6 | 1200 | 230 | 30 | 414 | 126 | 485 |
| | 8 | 1200 | 230 | 30 | 414 | 170 | 485 |
| | 10 | 1200 | 230 | 40 | 424 | 210 | 500 |

# Fondi Tipo F (Semi ellittici)

*Semielliptical heads*
*Fonds semi-elliptiques*

R=0,8xD r=D/6,5

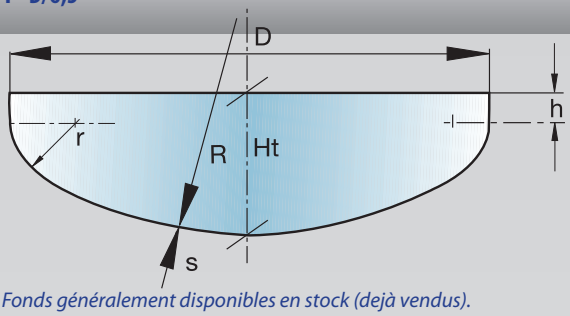


- ☐ Fondi generalmente disponibili a magazzino (salvo venduto).
- ● Fondi generalmente disponibili a magazzino (salvo venduto) anche in acciaio Inox.

I fondi evidenziati in scuro sono stampati

- ☐ *Dished heads generally avaiable in stock (sold excepted).*
- ● *Dished heads generally avaiable in stock (sold excepted) made in stainless steel.*

*Dished heads highlighted are press-formed*

- ☐ *Fonds généralement disponibles en stock (dejà vendus).*
- ● *Fonds généralement disponibles en stock (sauf dejà vendus), même en acier Inox.*

*Les fonds marqués en foncé sont emboutis*

| D | s | R | r | h | Ht | Kg. | V |
|---|---|---|---|---|---|---|---|
| **1500** | 12 | 1200 | 230 | 50 | 435 | 255 | 515 |
| | 15 | 1200 | 230 | 50 | 435 | 320 | 515 |
| | 18 | 1200 | 230 | 50 | 435 | 390 | 515 |
| | 20 | 1200 | 230 | 50 | 440 | 430 | 515 |
| | 22 | 1200 | 230 | 50 | 440 | 470 | 515 |
| **1600** | 5 | 1280 | 245 | 30 | 438 | 118 | 585 |
| | 6 | 1280 | 245 | 30 | 438 | 144 | 585 |
| | 8 | 1280 | 245 | 30 | 438 | 192 | 585 |
| | 10 | 1280 | 245 | 40 | 450 | 240 | 600 |
| | 12 | 1280 | 245 | 50 | 462 | 290 | 620 |
| | 15 | 1280 | 245 | 50 | 462 | 370 | 620 |
| | 18 | 1280 | 245 | 50 | 462 | 440 | 620 |
| | 20 | 1280 | 245 | 50 | 464 | 490 | 620 |
| | 22 | 1280 | 245 | 50 | 464 | 540 | 620 |
| **1700** | 5 | 1360 | 260 | 30 | 463 | 131 | 697 |
| | 6 | 1360 | 260 | 30 | 463 | 160 | 697 |
| | 8 | 1360 | 260 | 30 | 463 | 220 | 697 |
| | 10 | 1360 | 260 | 40 | 475 | 265 | 716 |
| | 12 | 1360 | 260 | 50 | 487 | 320 | 735 |
| | 15 | 1360 | 260 | 50 | 487 | 400 | 735 |
| | 18 | 1360 | 260 | 50 | 487 | 510 | 735 |
| | 20 | 1360 | 260 | 50 | 489 | 540 | 735 |
| | 22 | 1360 | 260 | 50 | 489 | 590 | 735 |
| **1800** | 5 | 1440 | 276 | 40 | 500 | 147 | 850 |
| | 6 | 1440 | 276 | 40 | 500 | 180 | 850 |
| | 8 | 1440 | 276 | 40 | 500 | 240 | 850 |
| | 10 | 1440 | 276 | 50 | 513 | 300 | 870 |
| | 12 | 1440 | 276 | 50 | 513 | 370 | 870 |
| | 15 | 1440 | 276 | 50 | 513 | 460 | 870 |
| | 18 | 1440 | 276 | 50 | 513 | 550 | 870 |
| | 20 | 1440 | 276 | 50 | 515 | 620 | 870 |
| | 22 | 1440 | 276 | 50 | 515 | 680 | 870 |
| **1900** | 5 | 1520 | 293 | 40 | 525 | 165 | 995 |
| | 6 | 1520 | 293 | 40 | 525 | 200 | 995 |
| | 8 | 1520 | 293 | 40 | 525 | 280 | 995 |
| | 10 | 1520 | 293 | 50 | 537 | 340 | 1020 |
| | 12 | 1520 | 293 | 50 | 537 | 410 | 1020 |
| | 15 | 1520 | 293 | 50 | 537 | 520 | 1020 |
| | 18 | 1520 | 293 | 50 | 537 | 620 | 1020 |
| | 20 | 1520 | 293 | 50 | 540 | 700 | 1020 |
| | 22 | 1520 | 293 | 50 | 540 | 760 | 1020 |
| **2000** | 5 | 1600 | 310 | 40 | 551 | 188 | 1155 |
| | 6 | 1600 | 310 | 40 | 551 | 230 | 1155 |
| | 8 | 1600 | 310 | 40 | 551 | 305 | 1155 |
| | 10 | 1600 | 310 | 50 | 564 | 380 | 1180 |
| | 12 | 1600 | 310 | 50 | 564 | 460 | 1180 |
| | 15 | 1600 | 310 | 50 | 564 | 580 | 1180 |
| | 18 | 1600 | 310 | 50 | 564 | 690 | 1180 |
| | 20 | 1600 | 310 | 50 | 568 | 780 | 1180 |
| | 22 | 1600 | 310 | 50 | 568 | 850 | 1180 |
| **2100** | 5 | 1680 | 323 | 40 | 576 | 203 | 1330 |
| | 6 | 1680 | 323 | 40 | 576 | 250 | 1330 |
| | 8 | 1680 | 323 | 40 | 576 | 340 | 1330 |
| | 10 | 1680 | 323 | 50 | 588 | 410 | 1350 |
| | 12 | 1680 | 323 | 50 | 588 | 500 | 1350 |
| | 15 | 1680 | 323 | 50 | 588 | 620 | 1350 |
| | 18 | 1680 | 323 | 50 | 590 | 760 | 1350 |
| | 20 | 1680 | 323 | 50 | 590 | 850 | 1350 |
| | 22 | 1680 | 323 | 50 | 590 | 920 | 1350 |

| D | s | R | r | h | Ht | Kg. | V |
|---|---|---|---|---|---|---|---|
| **2200** | 5 | 1760 | 340 | 40 | 602 | 220 | 1523 |
| | 6 | 1760 | 340 | 40 | 602 | 270 | 1523 |
| | 8 | 1760 | 340 | 40 | 602 | 360 | 1523 |
| | 10 | 1760 | 340 | 50 | 615 | 450 | 1555 |
| | 12 | 1760 | 340 | 50 | 615 | 550 | 1555 |
| | 15 | 1760 | 340 | 50 | 615 | 680 | 1555 |
| | 18 | 1760 | 340 | 50 | 618 | 820 | 1555 |
| | 20 | 1760 | 340 | 50 | 618 | 910 | 1555 |
| | 22 | 1760 | 340 | 50 | 618 | 1000 | 1555 |
| **2400** | 5 | 1920 | 370 | 40 | 652 | 254 | 1960 |
| | 6 | 1920 | 370 | 40 | 652 | 305 | 1960 |
| | 8 | 1920 | 370 | 40 | 652 | 410 | 1960 |
| | 10 | 1920 | 370 | 50 | 665 | 510 | 1995 |
| | 12 | 1920 | 370 | 50 | 665 | 620 | 1995 |
| | 15 | 1920 | 370 | 50 | 665 | 770 | 1995 |
| | 18 | 1920 | 370 | 50 | 668 | 930 | 1995 |
| | 20 | 1920 | 370 | 50 | 668 | 1030 | 1995 |
| | 22 | 1920 | 370 | 50 | 668 | 1140 | 1995 |
| **2500** | 5 | 2000 | 385 | 40 | 678 | 282 | 2205 |
| | 6 | 2000 | 385 | 40 | 678 | 340 | 2205 |
| | 8 | 2000 | 385 | 40 | 678 | 455 | 2205 |
| | 10 | 2000 | 385 | 50 | 690 | 570 | 2240 |
| | 12 | 2000 | 385 | 50 | 690 | 690 | 2240 |
| | 15 | 2000 | 385 | 50 | 690 | 860 | 2240 |
| | 18 | 2000 | 385 | 50 | 693 | 1040 | 2240 |
| | 20 | 2000 | 385 | 50 | 693 | 1155 | 2240 |
| | 22 | 2000 | 385 | 50 | 693 | 1270 | 2240 |
| **3000** | 5 | 2400 | 460 | 50 | 815 | 392 | 3825 |
| | 6 | 2400 | 460 | 50 | 815 | 480 | 3825 |
| | 8 | 2400 | 460 | 50 | 815 | 640 | 3825 |
| | 10 | 2400 | 460 | 50 | 816 | 790 | 3825 |
| | 12 | 2400 | 460 | 60 | 826 | 960 | 3870 |
| | 15 | 2400 | 460 | 60 | 826 | 1195 | 3870 |
| | 18 | 2400 | 460 | 60 | 830 | 1440 | 3870 |
| | 20 | 2400 | 460 | 60 | 830 | 1600 | 3870 |
| | 22 | 2400 | 460 | 60 | 830 | 1760 | 3870 |
| **4000** | 6 | 3200 | 615 | 50 | 1070 | 890 | 8860 |
| | 8 | 3200 | 615 | 50 | 1070 | 1170 | 8860 |
| | 10 | 3200 | 615 | 50 | 1070 | 1461 | 8860 |
| | 12 | 3200 | 615 | 60 | 1083 | 1760 | 8950 |
| | 15 | 3200 | 615 | 60 | 1083 | 2200 | 8950 |
| | 18 | 3200 | 615 | 60 | 1083 | 2650 | 8950 |
| | 20 | 3200 | 615 | 60 | 1083 | 2940 | 8950 |
| | 22 | 3200 | 615 | 60 | 1083 | 3240 | 8950 |
| | 24 | 3200 | 615 | 60 | 1083 | 3530 | 8950 |

*• These tables show the most common sizes. Intermediate sizes or diameters up to 4000 mm and thicknesses up to 22 mm can also be made.*
*• Height, weight and volume are theoretical values and as such are merely indicative and must not be taken as a basis for the contract.*

*• Ces tableaux indiquent les valeurs qui sont le plus fréquemment utilisées; il est naturellement possible de fabriquer des fonds présentant des caractéristiques intermédiaires ou supérieures, jusqu'à un D maxi. de 4000 mm et un épaisseur maxi. de 22 mm.*
*• Hauteur, Poids et Volume sont des données théoriques à titre purement indicatif et, par conséquent, elles ne doivent absolument pas être considérées en tant que base contractuelle.*